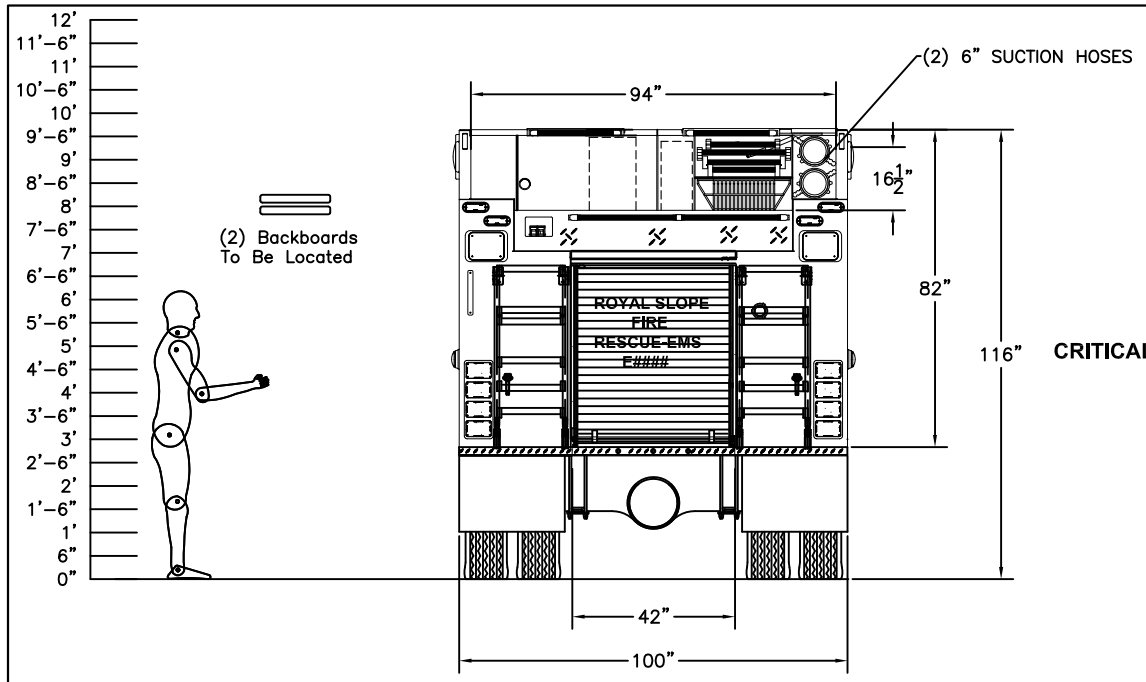


CRITICAL HEIGHT 116"

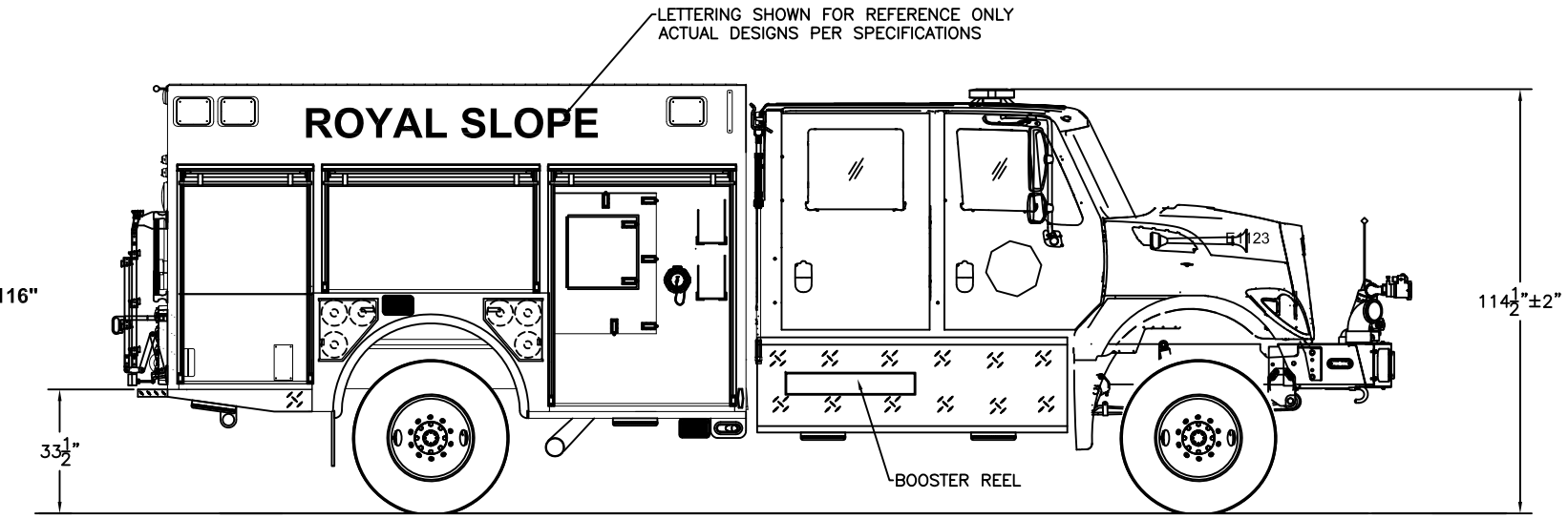


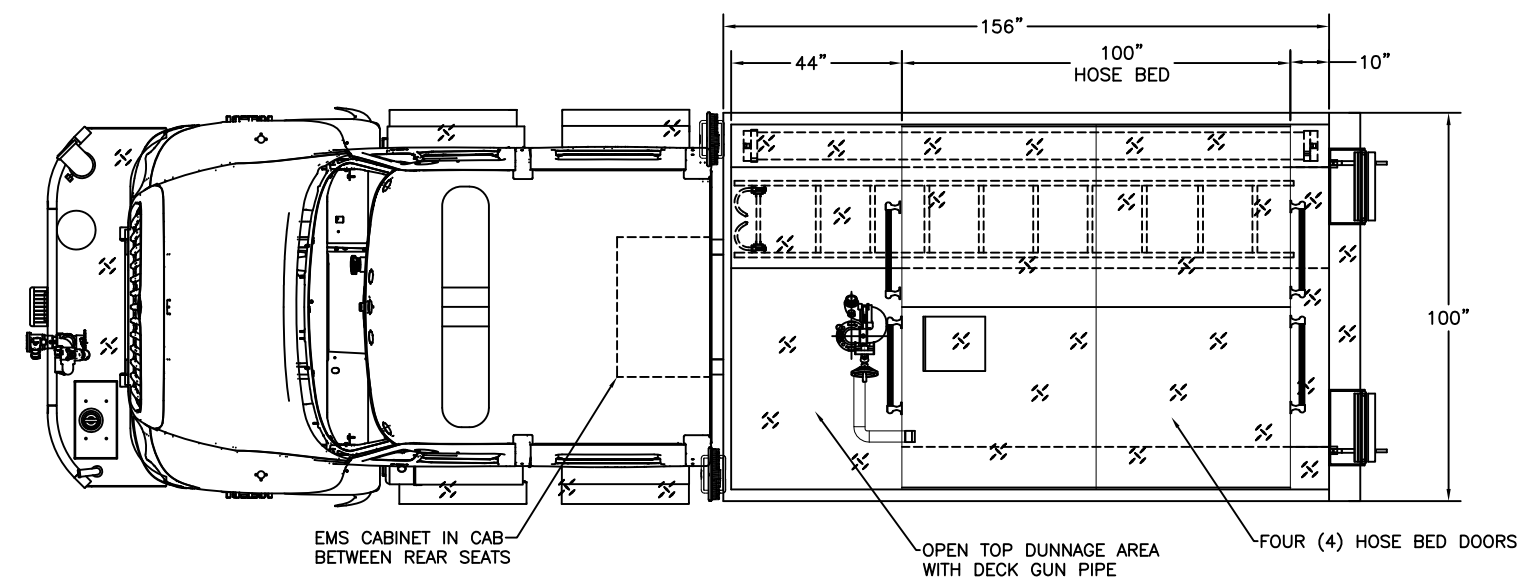


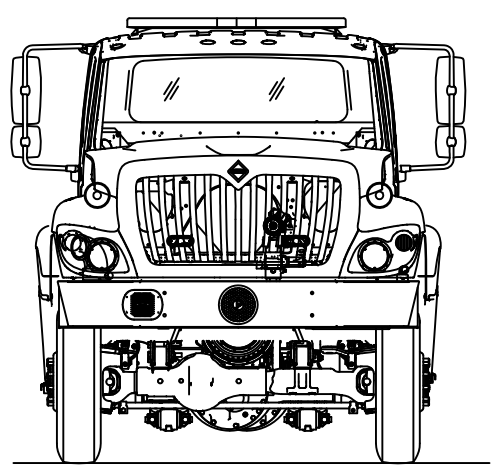

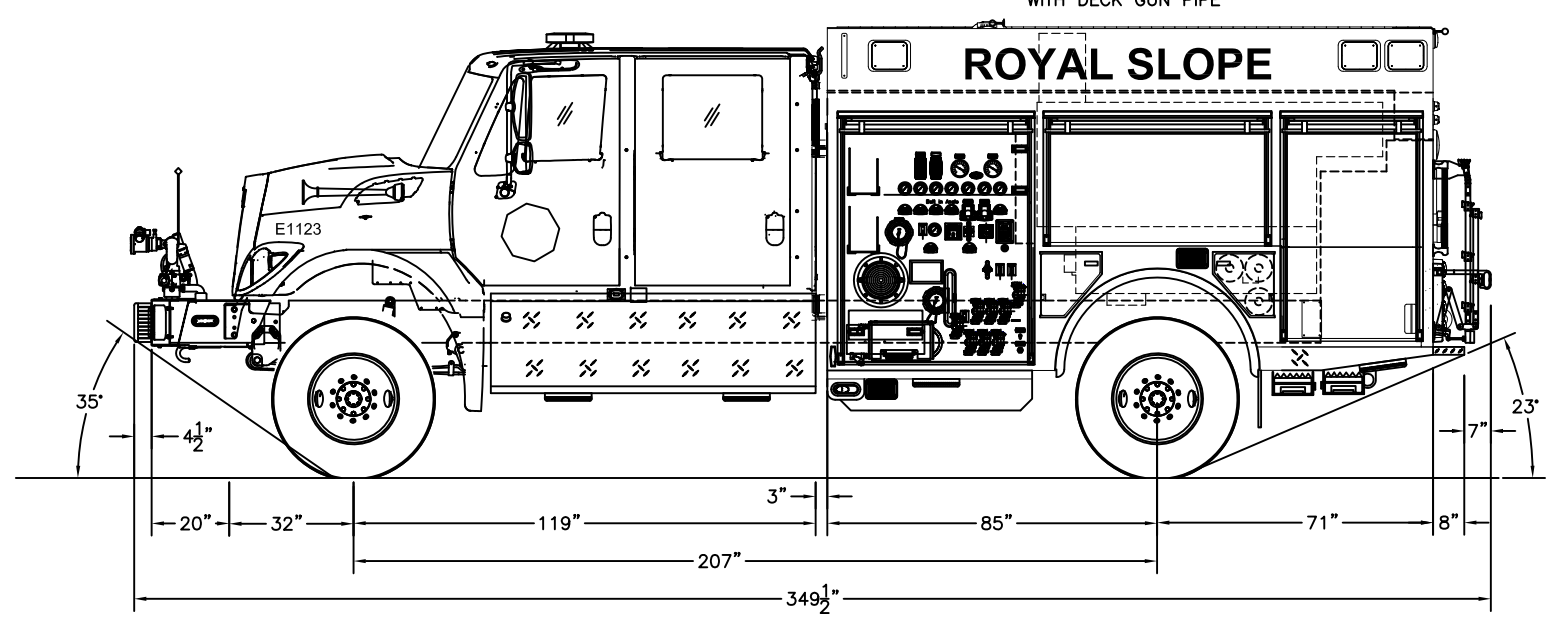


INLETS

(1) 6" DRIVER'S SIDE PUMP PANEL
(1) 6" FRONT BUMPER
(1) 2 1/2" AUX. SUCTION DRIVER'S SIDE PUMP PANEL

DISCHARGES

(1) 2 1/2" DRIVER'S SIDE PUMP PANEL
(1) 3" OFFICER'S SIDE PUMP PANEL W\ 4" STORZ & 4" STORZ x 2 1/2" NSTM
(1) 2 1/2" DRIVER'S SIDE HOSE BED
(1) 3" DECK GUN
(1) 1 1/2" FRONT BUMPER DISCHARGE
(2) 1 3/4" SPEEDLAYS
(1) 1 1/2" BOOSTER REEL OFFICER'S SIDE UNDER REAR CAB STEP
(1) 1 1/2" FRONT BUMPER TURRET

**INTERNATIONAL 7400 4x4 SFA 4 DR**
**ISL9 350 HP/3000 EVS P**
**HALE 1500/100 INTERFACE**
**800 W / 20 F GALLONS POLY TANK**
**156" RIDGERUNNER 3/16" ALUMINUM**

**14,000# FRONT AXLE/26,000# REAR AXLE**
**FOAMPRO 1601**

**THIS DRAWING IS A GENERAL CONFIGURATION AND MAY NOT NECESSARILY REFLECT ALL CONTRACTUAL REQUIREMENTS. CONTRACT SPECIFICATIONS SHALL PREVAIL OVER DRAWING.**

CUSTOMER APPROVAL:

NAME:

TITLE:

DATE:

| SYM | DATE | REVISION DESCRIPTION | APP'D |
|---|---|---|---|
| A | 6/29/17 | ENGINEERING LAYOUTS | SG |

SALES ENGINEER : SHAWN GOGOLA

DIMENSIONS ARE APPROXIMATE & MAY VARY DUE TO BUILD ADJUSTMENTS

| SCALE | DWG SIZE | DRAWN BY | DATE |
|---|---|---|---|
| 1"=24" | D | JJM | 9/8/2016 |
| | | APPROVED BY | |

KME COMMERCIAL RIDGERUNNER

GRANT COUNTY FIRE DIST. #10

GSO # 10533-34

KME
ONE INDUSTRIAL COMPLEX - NESQUEHONING, PA 18240