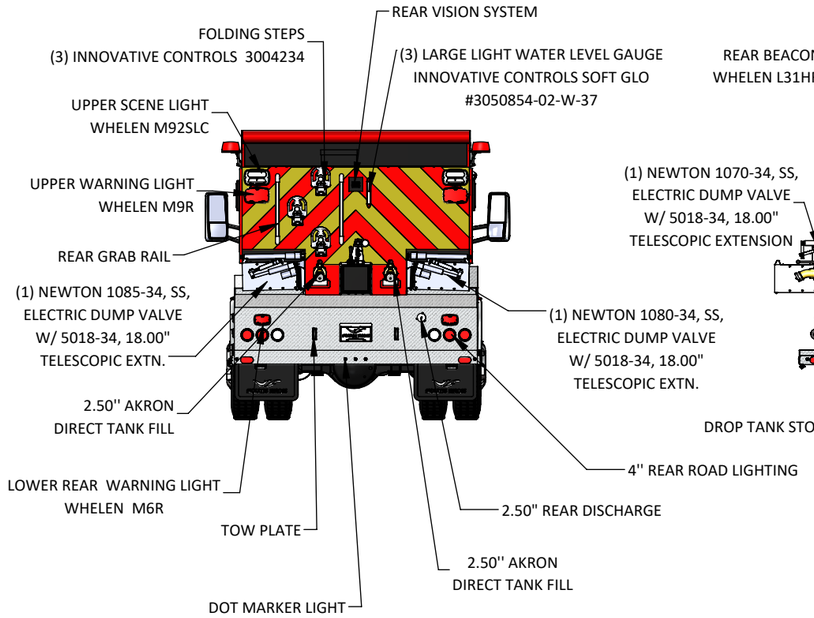

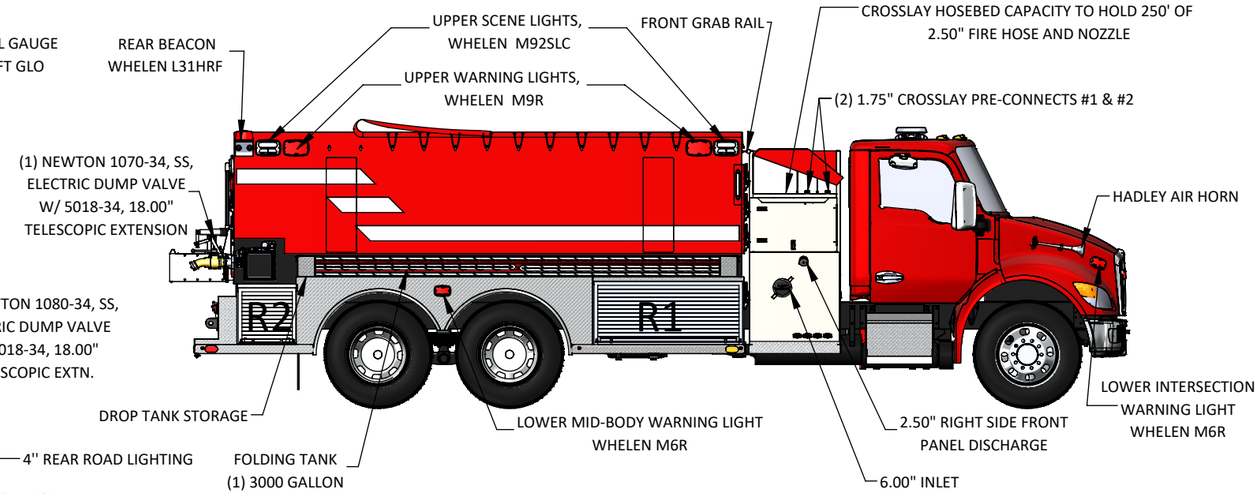

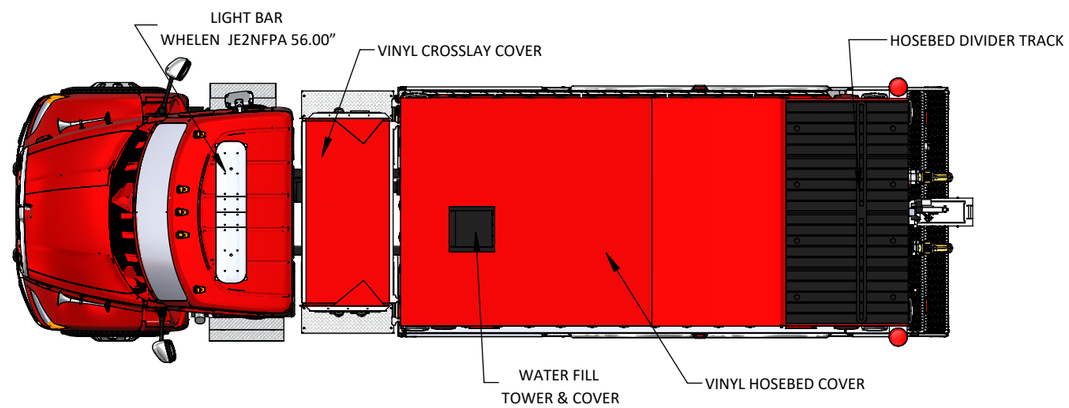

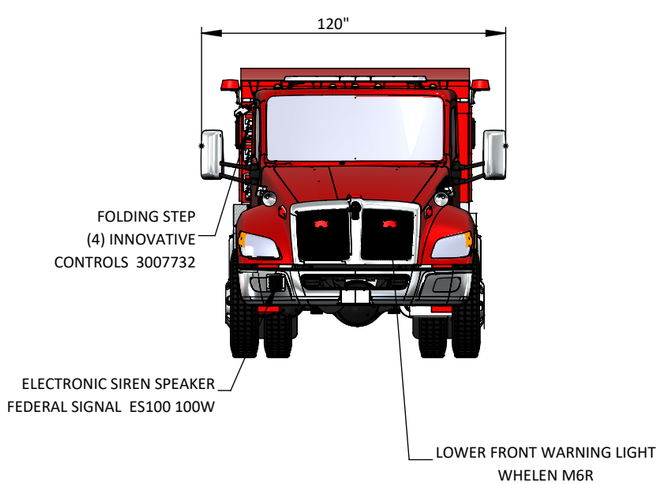

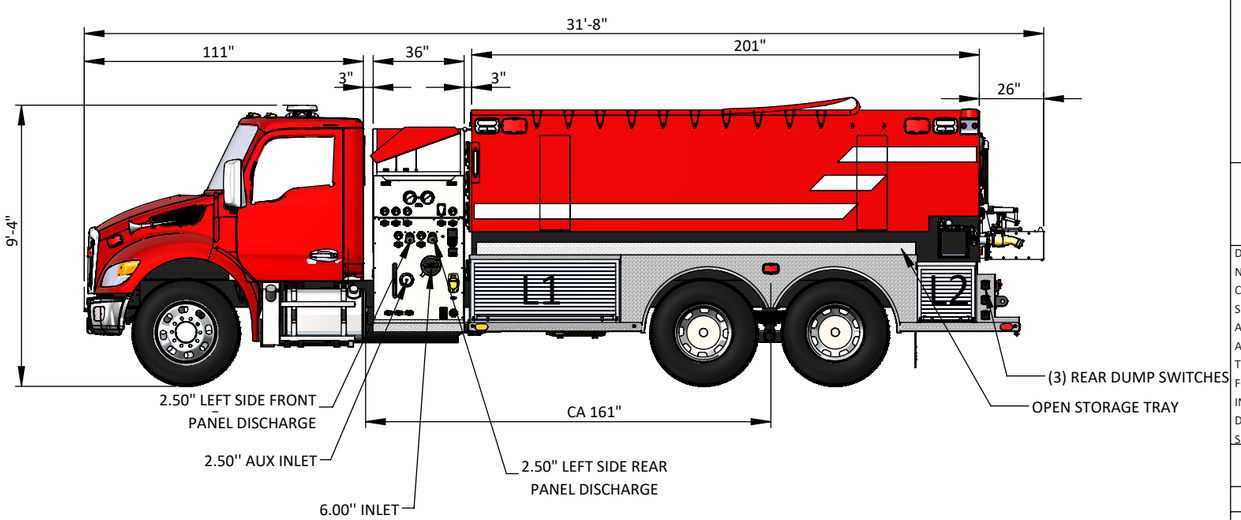

CHASSIS INFO	
CHASSIS	: KENWORTH T-480, 2 DOOR, TANDEM AXLE
ENGINE	: PX-9 380EV 450HP
TRANSMISSION	: ALLISON, 3000 EVS, 5-SPEED
FRONT AXLE	: 14,600 LBS.
REAR AXLE	: 40,000 LBS.
PAINT COLOR	: FOUTS BROS. RED

PUMP INFO	
PUMP	: HALE, MBP, 1000 GPM, SIDE MOUNT
INTAKES	
DRIVER SIDE	: ONE (1) 6.00" & ONE (1) 2.50" AUX
OFFICER SIDE	: ONE (1) 6.00"
DISCHARGES	
DRIVER SIDE	: TWO (2) 2.50"
OFFICER SIDE	: ONE (1) 2.50"
RIGHT SIDE REAR OF BODY	: ONE (1) 2.50"
PRE-CONNECTS	: TWO (2) 1.75"
PUMP MISC	
PUMP SHIFT SPECIFICATION	: STATIONARY PUMPING
PRIMING SYSTEM	: A TRIDENT 31.003.7 AIR OPERATED
PRESSURE GOVERNOR	: FRC PUMPBOSS PBA501
TANK TO PUMP	: ONE (1) 3.00"
TANK REFILL	: ONE (1) 2.00"
VINYL CROSSLAY COVER	: RED IN COLOR
WATER LEVEL GAUGE(S)	: ONE (1) IC SOFT-GLO 3050869-03-W-37 (PUMP PANEL)
	: ONE (1) IC SOFT-GLO 3050853-W-37 (CAB)
	: THREE (3) IC SOFT-GLO 3050854-02-W-37 (TANK)
PUMP PANEL MATERIAL	: 14 GAUGE 304L SS, BRUSHED FINISH

TANK INFO	
TANK WATER CAPACITY	: 3000 GALLONS
HOSEBED DIVIDER TRACKS	: INSTALLED IN THE HOSEBED
HOSEBED COVER	: VINYL, RED IN COLOR
DUMP VALVES	: THREE (3) ELECRIC DUMP VALVES WITH EXTENSION
DIRECT TANK FILL	: TWO (2) 2.50", AKRON

BODY INFO	
BODY TYPE	: ATP-4-COMPARTMENTS
DOOR TYPE	: AMDOR ROLL-UP DOOR, SATIN FINISH
DROP TANK STORAGE	: RH SIDE
OPEN STORAGE TRAY	: LH SIDE
LH SIDE COMPARTMENTS	
L1	: 60.00"WX26.00"DX27.00"H = 24.375 CU.FT
L2	: 24.00"WX26.00"DX24.00"H = 8.666 CU.FT
RH SIDE COMPARTMENTS	
R1	: 60.00"WX26.00"DX27.00"H = 24.375 CU.FT
R2	: 24.00"WX26.00"DX24.00"H = 8.666 CU.FT
TOTAL VOLUME	: 66.082 CU.FT
LOOSE EQUIPMENTS	
FOLDING TANK	: ONE (1) 3000 GALLON, RED IN COLOR

FOUTS FIRE

DIMENSIONS SHOWN ARE APPROXIMATE AND SUBJECT TO CHANGE AS MAY BE FOUND NECESSARY DURING CONSTRUCTION. MINOR DETAILS MAY NOT BE SHOWN TO RETAIN CLARITY WITHIN THE DRAWING. THE DRAWING IS FOR REFERENCE PURPOSES ONLY. SPECIFICATIONS SHALL BE THE FINAL AUTHORITY OF WHAT IS SUPPLIED ON THE APPARATUS. OVERALL HEIGHT IS IN LOADED CONDITION. UNLOADED HEIGHTS MAY BE 4" ABOVE HEIGHTS SHOWN. THE EFFECTIVE DOOR OPENINGS WILL BE APPROX. 2" LESS THAN THE NOTED COMPARTMENT OPENING FOR ROLL UP DOORS AND UP TO APPROX. 4" LESS FOR HINGED DOORS INCLUSION OF AN ITEM ON THE DRAWING DOES NOT CONSTITUTE INCLUSION OF THAT ITEM WITH THE FINAL DELIVERED UNIT IN THE EVENT THERE ARE DISCREPANCIES BETWEEN THE DRAWING AND THE SPECIFICATIONS. THE SPECIFICATIONS SHALL PREVAIL

DECIMAL : ± 0.062 FRACTIONAL : ±1/16	ENG CHRIS	REV R00	SCALE 1:60	DWG SIZE D	DATE 09 FEB 2024
FOR :	SOUTH WHIDBEY				
TITLE :	3000 GALLON SUPER TANKER				
PRODUCTION :	N/A				